72324NMB, 72325NMB, 72326NMB

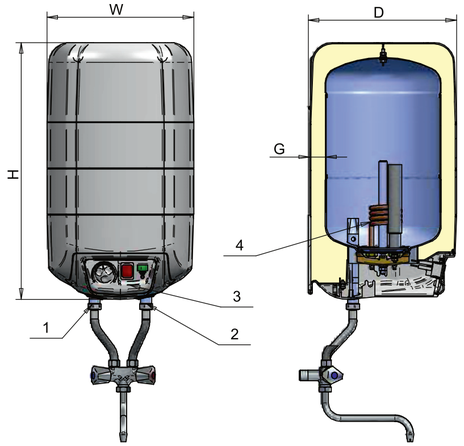

72324NMP, 72325NMP, 72326NMP

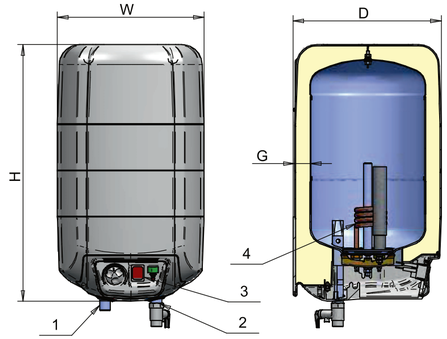

72324PMP, 72325PMP, 72326PMP

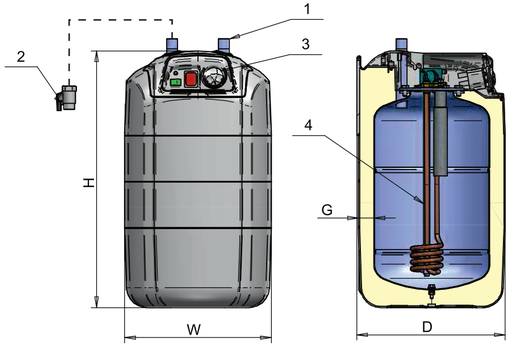

PMP - under sink under pressure
NMP - above sink under pressure
NMB - above sink without pressure

Water heaters 7, 10,15L										
CHARACTERISTICS										
Installation		For installation above sink						For installation under sink		
Operation principle		Open-outlet (with free flow)			Under pressure (closed)			Under pressure (closed)		
Model	...	72324NMB	72325NMB	72326NMB	72324NMP	72325NMP	72326NMP	72324PMP	72325PMP	72326PMP
Volume range	L	7	10	15	7	10	15	7	10	15
Water heating energy efficiency class	-	B	B	B	B	B	B	B	B	B
Load profile	-	3XS	XXS	XS	3XS	XXS	XS	3XS	XXS	XS
Annual electricity consumption	kWh/annum	89	546	517	93	534	517	95	573	523
Rated presure	MPa	0	0	0	0.8	0.8	0.8	0.8	0.8	0.8
Rated voltage	V~	230	230	230	230	230	230	230	230	230
Rated electrical power	kW	1.5	1.5	1.5	1.5	2.0	2.0	1.5	2.0	2.0
Weight	kg	6.1	6.9	7.6	5.7	6.6	7.6	5.8	6.8	8.0
CONNECTIONS										
1: Hot water outlet		G1/2 M	G1/2 M	G1/2 M	G1/2 M	G1/2 M	G1/2 M	G1/2 M	G1/2 M	G1/2 M
2: Cold water inlet - Drain		G1/2 M	G1/2 M	G1/2 M	G1/2 M	G1/2 M	G1/2 M	G1/2 M	G1/2 M	G1/2 M
3: Control panel		-	-	-	-	-	-	-	-	-
4: Flange with heating element		-	-	-	-	-	-	-	-	-
DIMENSIONS										
W	mm	285	285	285	285	285	285	285	285	285
D	mm	288	288	288	288	288	288	288	288	288
H	mm	340	430	520	340	430	520	340	430	520
G (Insulation thickness)- CFC free polyurethane	mm	30	30	30	30	30	30	30	30	30